Design and physical performance of fish apartments by utilizing pearl oyster shell waste

[1]Jacomina Tahapary, [2]Domu Simbolon, [2]Zulkarnain, [2]Budy Wiryawan

[1] Study Program of Marine Fishery Technology, Graduated Program, Bogor Agricultural University, Bogor, Indonesia; [2] Departement of Fishery Resources Utilization, Faculty of Fisheries and Marine Science, IPB University, Bogor, Indonesia. Corresponding author: J. Tahapary, jacomina.tahapary@polikant.ac.id

Abstract. Like artificial habitats, fish apartments are built to restore reef fish resources in degraded coral reef ecosystems. The design consists of a concrete material combined with pearl shells of the *Pinctada maxima* species. The structural components of the fish apartment consist of three parts, namely ballast, table, and pole. The weights are located at the bottom or base, the table is in the center of the structure, and the posts are at the top of the structure. The shells are glued and anchored to the concrete of the fish apartment and form a complex fish house structure resembling a natural reef. Physically, the fish apartment can attract fish to gather and provide protection for coral organisms. The results shows that there were 64 species of reef fish that gathered and utilized the fish apartments within the 6 months of use in the waters.
Key Words: artificial habitat, coral reef degradation, rehabilitation.

Introduction. A fish apartment is an artificial habitat built for the restoration of coral reefs and biota resources related to coral reefs. The design of fish apartments needs to adapt to the habits and behavior of coral organisms. The purpose of artificial habitats is to accelerate the growth or regeneration of degraded coral reefs, so that fish can return to their original habitats (Harriot & Fisk 1988). The roles of coral reefs are as a shelter, food source, spawning area and shoreline protection (White et al 1990; Rani 2003). Another function is to aggregate fishing target species, thus improving the efficiency of fishing activities (Samidjan 2011; dela Cruz et al 2014).

Pickering & Whitmarsh (1999) stated that the structural design of the fish apartment is an important factor because it can increase productivity and performance for collecting fish and other organisms. Aspects of the design are the material, shape, size, laying pattern, and configuration. An ecological fish apartment design must function like a natural reef, being compatible with the habitat desired by the fish. Ecological processes, namely tropical levels, productivity, and production depend on the structure of the fish apartment (Vivier et al 2021). This means that the shape, configuration, size, volume, material, and area of the fish apartment must be able to create comfortable conditions for the fish. In addition, the design also needs to be adapted to the behavior of the fish when foraging, sheltering from predators, spawning, and other activities. Therefore, the design can be varied so that many species of fish would find it comfortable and remain more time around the fish apartment.

In Southeast Maluku waters, the coral reef ecosystem has a total area of 300 km^2. The condition of the coral reefs is generally in the moderate category, namely with a portion of live coral cover of 46.77%. Fishing activities using fish bombs have resulted in dominant coral fractures (40%) and only 29.41% are in good condition. Live coral cover is less than 75% (Afandy & Supeni 2014; Prabuning et al 2016; Hadi et al 2018). Rubble is an indicator of the stability of the bottom substrate, not suitable for planula attachment, thereby worsening the natural growth of coral reefs and affecting the existence of reef fish. In order for the fish to return to their habitat, artificial habitats are built, which aim to accelerate the recovery or regeneration of damaged coral reefs.

This study aims to design a fish apartment that utilizes pearl shell waste and determine the physical performance of a fish apartment design in attracting and collecting fish.

Material and Method

Description of the study sites. This research was conducted in the waters of Ohoieuw Island, located on the West Coast of Kei Kecil, Southeast Maluku Regency, Indonesia (Figure 1). This location was chosen because the coral reefs in the area have been degrading. In the islands of the region, the lowest coral cover value with the highest coral mortality index value of 0.07-0.035 was observed on Ohoieuw Island (Afandy & Supeni 2014). The study was conducted from April to October 2020.

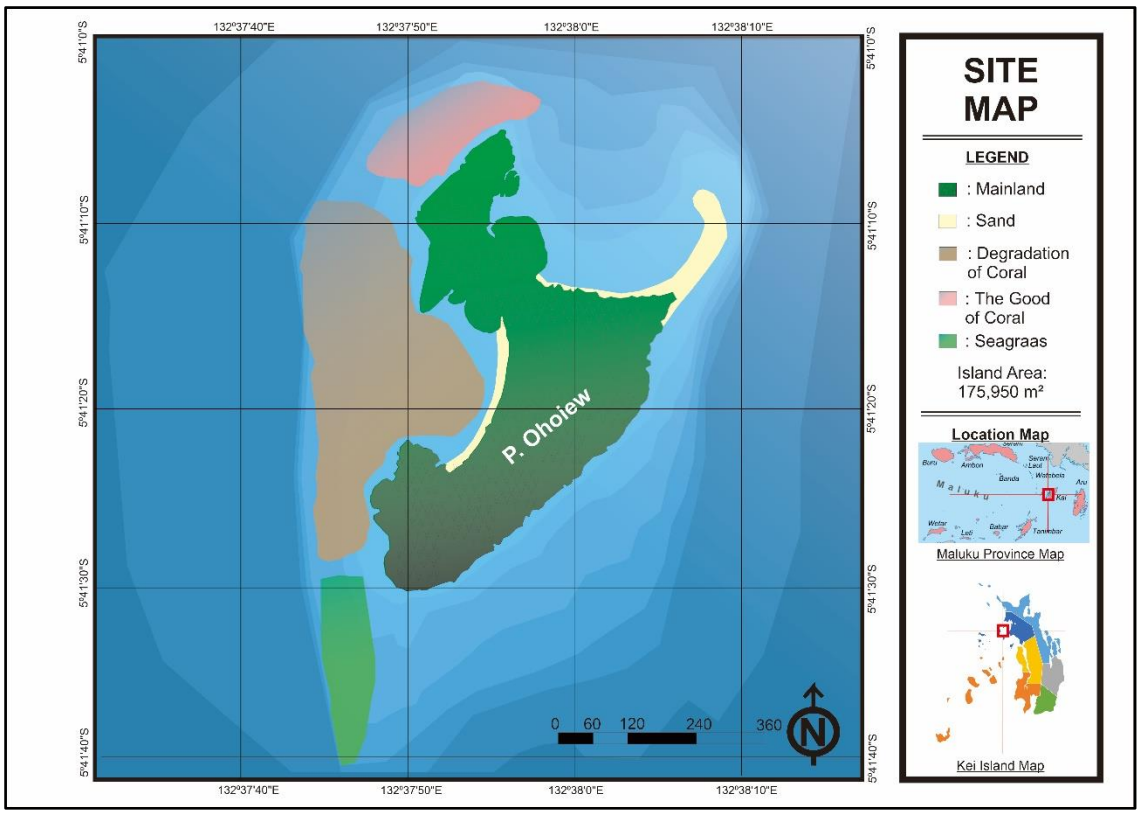

Figure 1. The location of research at Ohoieuw Island, Southeast Maluku, Indonesia.

Research design. The design of the fish apartments was made to resemble a natural reef, and had two forms, namely a design with glued coral shells and one with embedded shells. The goal was to see if fish are interested in these two designs. The determination of the shape of the fish apartments refers to previous research on artificial reefs that vary greatly both in form and in the use of materials (Meier & Eskridge 1994). The placement of the fish apartments was based considering the topographical conditions of the water substrate, currents, waves, and the level of degradation of coral reefs. The data collected regarding the fish apartments consisted of a preliminary performance of the fish apartments in the waters, as well as the oceanographic and physical parameters of the locations. Observations were made after 14 days of placement, and continued for 6 months.

The fish apartments were designed to have physical complexity such as the natural reefs. They were provided with holes and gaps for fish to take shelter. Referring to previous studies, fish apartments or artificial reefs are generally designed with concrete materials. De Silva (1989) states that concrete is an artificial reef-building material with a longer life and cracks and surfaces. In this study, the material for forming the fish apartment was concrete with pearl shells fixed in different forms. Observational data on the physical characters were analyzed descriptively. The data analyzed were material composition,

shape, the pattern of gaps/holes, gluing of shells on the concrete, shells used, laying on the seabed, and marine performances. The data also included the height, width, diameter of the gaps, area of shelter, wall thickness, and weight of the fish apartment.

Data analyses. Stability in the sea was analyzed based on currents and waves around the location of the fish apartment placement. Nakamura (1982a,b) states that stability is based on the influence of currents and waves on the reef. The reef stability in currents was obtained with the following formula:

Current force on the reef $= C_D A\rho \frac{v^2}{2g}$

Where: variable *A* is the area of the reef that receives water resistance (right angle shadow), $A\rho$ is the density of seawater, *v* is the current velocity, C_D is the drag coefficient and *g* is the gravitational acceleration.

The weight of the reef unit needed to remain stable on the substrate was calculated by the following equation (Nakamura 1982a,b):

$$W > \frac{F}{1-\frac{\rho}{\sigma}} \cdot \frac{\iota_A}{\iota_W}.$$

Where: the variable *W* is the weight of the reef in the water, *F* is the hydrodynamic force on the reef, σ is the density of the reef, ρ is the density of seawater, ιW - is reef width, and ιA - is reef height.

The stability of the reef under the influence of waves was calculated based on the following formula (Nakamura 1982a,b):

$$F = C_D A\rho \frac{u_m^2}{2g} + C_M V \frac{\rho}{g} \cdot \frac{\partial v}{\partial}$$

Where: the variable *F* is the wave force, ρ is the density of seawater, v is the current velocity surface, *v* is the maximum horizontal orbital velocity at the crest of the reef, u_m^2 is the drag coefficient, C_M is the mass coefficient, *A* is the area of the reef receiving water resistance and *V* is the actual volume of the reef.

Results and Discussion

The construction material used in the artificial reef. 16 fish apartments were built. The materials used to make the fish apartments were concrete combined with waste pearl shells (Figure 2). The choice of concrete as the basic material for making fish apartments was made to have an adherent surface for the fixation of the shells. Concrete is also durable and stable, and can be shaped in various possibilities (Bombace et al 1994; Clarks & Edwards 1994; Pickering & Whitmarsh 1999; Baine 2001; Lukens & Selberg 2004). Concrete is a material that makes reef structures more complex, has a long age and a very good surface (de Silva 1989; Ramm et al 2021). It has a high resistance to seawater (Mohammed et al 2004).

Fish have a strong tendency to congregate around artificial reefs (Carlilsle et al 1964; Paxton et al 2020). In addition to concrete, pearl shell waste from the *Pinctada maxima* species was also used. This species has a fairly large size, with a relatively flat shape and a rough outer surface, so that it can be overgrown by algae or periphyton.

Figure 2. Materials: a. bend wire; b. iron concrete; c. gauze; d. rope; e sand; f. stone; g. cement; h. pearl shells.

Design. The structural components of the fish apartments consist of 3 parts, namely ballast, table, and pole (Figure 3). The weights are located at the bottom (base), the table is in the middle, and the posts are at the top.

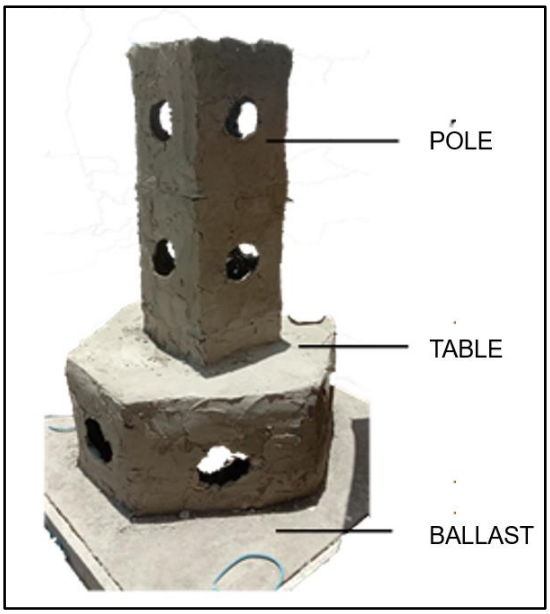

Figure 3 Design of the artificial reef.

The ballast frame is formed using concrete iron, which is then filled in a rectangular shape. Afterwards, it is filled with concrete, and assembled to the table frame, with the poles being introduced last (Figure 4).

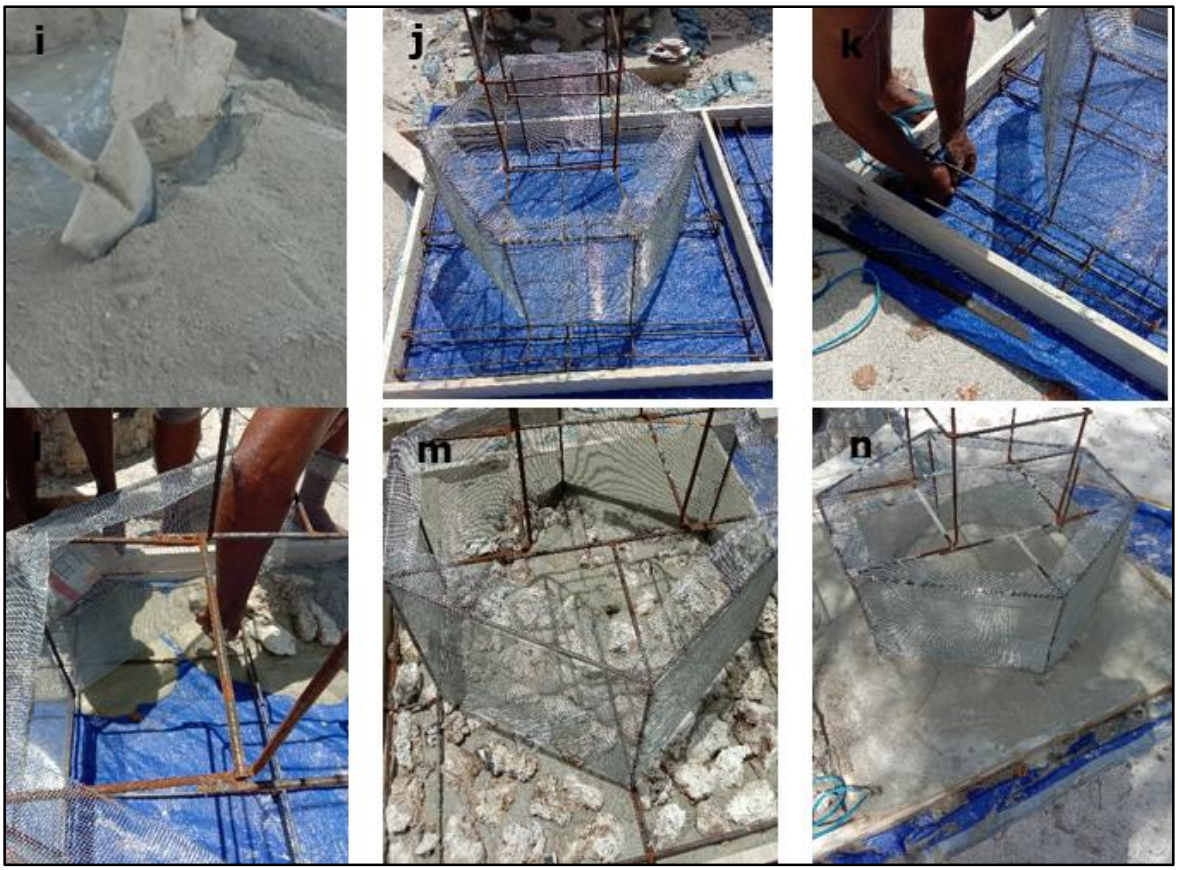

Figure 4 Structure stages: i. sand; j. frame instalation; k. attaching the rope to the weight frame; l. arrangement of stones on the ballast frame; m. arranged stones; n. cement mixture on the ballast frame.

After the iron frame is formed, it is covered with ram wire. The ram wire helps coating the cement mixture as a concrete base material. The ram wire covering the table frame and poles makes a gap in the table wall. Stones are arranged on the table as ballast and coated with cement. The cement mixture is also coated on the ram wire and the poles, for more stability. Figure 5 shows the stages of the application of concrete materials and shells.

The pearl shells were glued and embedded into the flat concrete surface. Shells were glued using a wet cement mixture. The embedding of shells in concrete was carried out in holes made in the hardened concrete, with a mixture of wet cement. The top of the structure was left open to allow fish movement and to reduce the lifting effect of wave action and turbulence due to strong currents (Warzecha 1997). The shape of the pearl oyster shells is presented in Figure 6.

It should be understood that structural design plays a role in the attractiveness and concentration of the different faunistic components (Bombace 1989). The shape of the fish apartment is a combined block type, with the lower part in the form of a table and the upper part in the form of a pole. This structure provides space for fish swimming in the water column. The interior is an empty space that functions as a shelter for fish and other coral biota. Due to the big dimensions of structure, it should be made close to the location where it is planned to be placed. The shape of the fish apartment must take into account the shape of the natural reef, a structure that provides cavities and gaps for fish.

Figure 5. Stages of application of concrete materials and shells; o. formed weight frame and table; p. coating of cement material on the pillar frame; q. shells glued to the table; r. shells glued to the pole; s. hole in the wall; t. shells are placed in the hole.

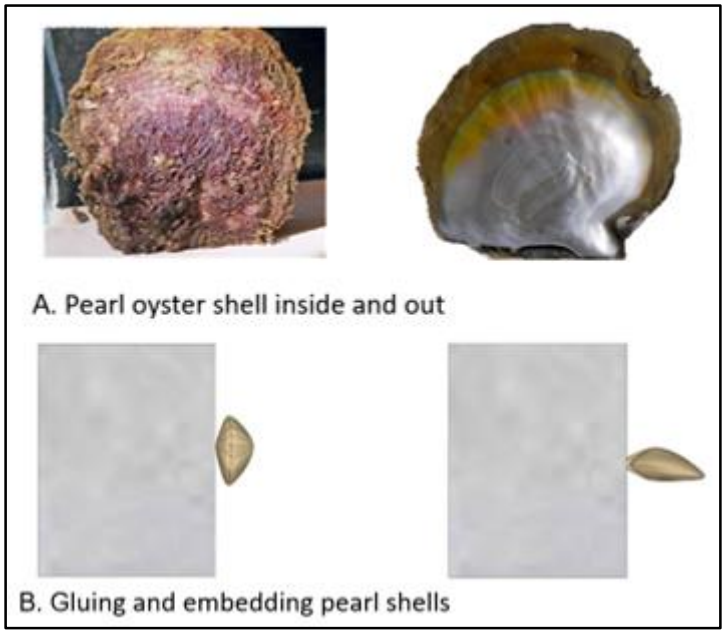

Figure 6. The outer and inner shape of the pearl oyster shells (A), and the gluing and attachment of the shells to the concrete wall (B).

The structure of a fish apartment as an artificial reef explores the actual relationship between fish and habitat, which is easier to measure than in natural reefs. A fish apartment designed by gluing coral shells on all parts of the concrete (Figure 7-A) is one method to construct the fish apartment. The reef design combined with pearl oyster shells can attract fish to gather and use the fish apartment as a place to live. A different design is a fish apartment with shells attached to the side of the concrete (Figure 7-B). Such a design was used to assess the preferences of fish from different structures (Figure 7).

Figure 7. Application of clamshells.

The size of the fish house for the two designs did not differ much. The only difference was in the pattern of the attachment of pearl shells (Figure 8).

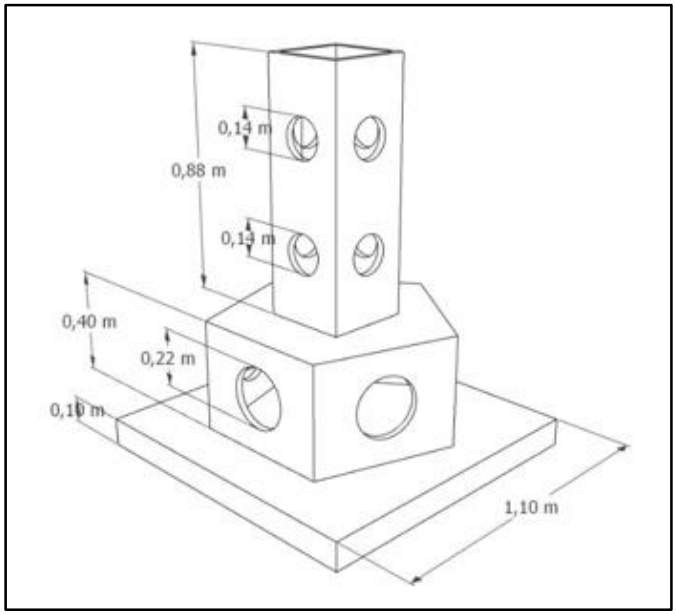

Figure 8. Size of the ballast, table, and pole.

The fish apartment is an engineering habitat, where coral organisms can interact with the artificial habitat, thereby becoming a feature to support the abundance and diversity of fish.

Placement of the fish apartments. The waters around Ohoieuw Island are calm and protected because of nearby islands. However, in the western part of the island there are often destructive fishing activities that affect coral reefs and leave coral rubble. In the north and south, there are coral reefs in good condition, these being open areas. The placement of the fish apartments was carried out in the east monsoon, when there were no high waves. The fish apartments were placed at a distance of 100 m from the shore, at a depth of 6-8 m, taking into account the waves that can damage it during the west season and also the risk of diving during underwater observations.

After being built, the fish apartments were left for two weeks, to permit the cement layer and shells to fix to the structure. The placement was in shallow water, for easier monitoring and for improving nearshore fisheries (Bombace et al 1994; Omar et al 1994; Fabi & Fiorentini 1994; Ramm et al 2021). There were 16 fish apartment built, divided into 8 units for each location. The distribution was carried out for 2 days and was done manually. Each selected point of placement contained 2 units. The distance between location 1 and location 2 was 500 m. The distance between point to point was between 15-20 m at location 1. At location 2, it was between 20-30 m. The distance between fish apartments per point at location 1 was between 0.3-2 m, to avoid disturbing the corals in good condition at that location. At location 2, because the substrate was mostly broken coral and sand, the placement was between 0.3-1 m. After the fish apartments were placed, they were marked.

Stability. The stability of the fish apartment in the water is the main requirement for resistance to physical factors. The fish apartment is expected to be in the sea for more than 5 years because a new coral reef colony will form in the fish apartment. The stronger and more stable it is in the sea, it has a greater chance of becoming a fish dwelling in the long term. Stability prevents structural failure because of waves and currents. Coastal zones are generally dynamic, changing rapidly as a reaction to natural processes as well as human activities. Stability due to waves and currents must be considered in the design (Armono 2004). The physical characteristics needed for artificial reefs to successfully maintain their functions need to consider local hydrodynamic forces and substrate (Reppie 2016).

The weight of the fish apartment on land was 373.96 kg, while the weight in the water was 363.167 kg. The average current velocity at the research site was 0.044 m s^{-1}. Because of the big weight of the fish apartment, waves and currents are not able to move or shift it. The current speed is in the optimal range for the brightness and temperature of the waters. The current speed determines the temperature distribution and agitates the mass of water. The highest wave height occurred in June-August, 1-1.24 m, while in March-May, and October the wave height was between 0.5-0.6 m (Southeast Maluku Meteorology, Climatology, and Geophysics Agency, 2020). The period value affects the stability of the fish apartment structure in water. If the water recedes, the depth decreases with 3.2–5.2 m, not affecting the stability of the fish apartment. The lowest ebbs occur from October to December. The current speed ranged from 0.28-0.58 m s^{-1}, with an average speed of 0.38 m s^{-1}. Stability is closely related to waves and currents (Sohn et al 2011; Yoon et al 2016). High current velocity can stir sediments and threaten the stability of fish apartments. During the east monsoon, the wind blows from behind the fish apartment stocking location, so that there are no waves or small waves. The location of the fish apartment is facing the direction of the wind coming from the west to the northwest.

The fish apartment is hollow and has holes for fish movement. These cavities minimize the friction between the waves and the fish apartment. Water can flow through the gaps and does not harm the structure (Sidek 2007). Artificial dome-shaped reefs are effective in reducing waves and generating favorable eddies (Armono 2004).

Preliminary physical performance. After being in the water for 6 months, it was observed that the apartments attracted reef fish. The observed reef fish found food and shelter in the apartments. There were 60 species observed, from 15 families of reef fish: Pomacentridae (10 species), Chaetodontidae (9 species), Labridae (9 species), Scaridae (7 species), Acanthuridae (6 species), Nemiptiridae (4 species), Mullidae (4 species),

Siganidae (2 species), Balistidae(2 species) Blennidae (2 spaces), Zanclidae (1 species), Lutjanidae (1 species), Serranidae (1species), Platycephalidae (1 species), Scorpanidae (1 species). Although the preliminary results seem positive, further studies are needed to observe which fish are not attracted, how long do fish spend in the vicinity of the apartments, how long they take to be comfortable with the new additions in the water, and others. So far, it can be concluded that the fish apartments can become new habits used by reef fish.

Conclusions. The fish apartment is designed with materials that are easy to obtain, cheap, and do not cause pollution. The design follows the structure of natural coral reefs, namely by providing gaps and cavities for fish to shelter and move. The design by utilizing *Pinctada maxima* pearl shells can form an artificial habitat structure that resembles a natural reef, attracting coral fish, but also target species for fishermen.

Acknowledgements. We want to thank the Ministry of Education, Culture, Research, and Technology for funding this study and research. The authors also thank the Polytechnic Diving Club (PDC) and the Ngilngof Village Community, Southeast Maluku Regency for their assistance during this research.

Conflict of Interest. The authors declare that there is no conflict of interest.

References

Afandy Z., Supeni E. A., 2014 [Condition of coral reefs on the west coast of Kei Kecil Island, Southeast Maluku Regency]. Neritic Journal 5:8-14. [In Indonesian].

Akhwady R. P., Tamtomo C., Luthfi O. M., 2018 Used evaluation of stone ash and clamshell as concrete material of artificial reef at Pasir Putih Beach Situbondo Indonesia. International Journal of Basic and Applied Sciences 18(2):1-7.

Armono H. D., 2004 Artificial reefs as shoreline protection structures. The 4th Conference of Application Theory and Marine Technology, ITS, Surabaya, Indonesia, 14 p.

Baine M., 2001 Artificial reefs: a review of their design, application, management, and performance. Ocean & Coastal Management 44(3-4):241-259.

Bombace G., 1989 Artificial reefs in Mediterranean Sea. Bulletin of Marine Science 44(2):1023-1032.

Bombace G., Fabi G., Fiorentini L., Speranza Z., 1994 Analysis of the efficacy of artificial reefs in five different areas of the Adriatic Sea. Bulletin of Marine Science 55(2-3):559-580.

Carlisle J. G., Turner C. H., Ebert E. E., 1964 Artificial habitat in the marine environment. The Resources Agency of California, Department of Fish and Game, Fish Bulletin 124, 94 p.

Clark S., Edwards A. J., 1994 Use of artificial reef structures to rehabilitate reef flats degraded by coral mining in the Maldives. Bulletin of Marine Science 55(2-3):724-744.

De Silva M. W. R. N., 1989 Artificial reefs: A practical means to enhance living marine resources. In: The coastal area management in Southeast Asia: Policies, management, and strategies. Chua T. E., Pauly D. (ed), ICLARM, Malaysia, pp. 173-180.

Dela Cruz D. W., Villanueva R. D., Baria M. V. B., 2014 Community-based, low-tech method of restoring a lost thicket of *Acropora* corals. ICES Journal of Marine Science 71(7):1886-1875.

Fabi G., Fiorentini L., 1994 Comparison between an artificial reef and a control site in the Adriatic Sea: Analysis of four years of monitoring. Bulletin of Marine Science 55(2-3):538-558.

Hadi T. A., Giyanto, Bayu P., Hafizt M., Suharsono A. B., 2018 [Status of Indonesia's coral reefs 2018]. Center for Oceanographic Research, Indonesian Research Institute, 26 p. [In Indonesian].

Harriot V. J., Fisk D. A., 1988 A comparison of settlement plate types for experiments on the recruitment of scleractinian corals. Marine Ecology - Progress Series 37:201-208.
Lukens R. R., Selberg C., 2004 Guidelines for marine artificial reef materials. 2nd Edition. A Joint Publication of the Gulf and Atlantic States Marine Fisheries Commissions, 205 p.
Meier M. H., Eskridge J. B., 1994 Made in Virginia: the past, present, and potential future of Virginia's artificial reef program. Bulletin of Marine Science 55:1346.
Mohammed T. U., Hamada H., Yamaji T., 2004 Performance of seawater-mixed concrete in the tidal environment. Cement and Concrete Research 34(4):593-601.
Nakamura M., 1982a The planning and design of artificial reefs and tsukiio. In: Japanese artificial technology. Vik S. F. (ed), Aquabio Inc., Annapolis, Technical Report 604, pp. 49-65.
Nakamura M., 1982b Structures of materials and designing installation. In: Japanese artificial technology. Vik S. F. (ed), Aquabio Inc., Annapolis, Technical Report 604, pp. 165-200.
Omar R. M. N. R., Kean C. E., Wagiman S., Hassan A. M. M., Husein M., Hassan R. B. D., Hussin C. O. M., 1994 Design and construction of artificial reefs in Malaysia. Bulletin of Marine Science 55(2-3):1050-1061.
Paxton A. B., Shertzer K. W., Bacheler N. M., Kellison G. T., Riley K. L., Taylor J. C., 2020 Meta-analysis reveals artificial reefs can be effective tools for fish community enhancement but not are one-size-fits-all. Frontiers in Marine Science 7:282.
Pickering H., Whitmarsh D., Jensen A., 1999 Artificial reefs as a tool to aid rehabilitation of coastal ecosystem: Investigating the potential. Marine Pollution Bulletin 37(8-12):505-514.
Prabuning D., Putra M. I. H., Amkieltiela, Abdillah T., Estradivari, Harris J., 2016 [Observation of benthic and reef fish communities in the marine protected area and small islands of Kei Kecil Island, islands and surrounding waters - Southeast Maluku]. WWF Indonesia, Kei's Office. [In Indonesian].
Ramm L. A. W., Florisson J. H., Watts S. L., Becker A., Tweedley J. R., 2021 Artificial reefs in the Anthropocene: a review of geographical and historical trends in their design, purpose, and monitoring. Bulletin of Marine Science 97(4):699-728.
Rani C., 2003 [Damaged fisheries and coral reefs. How to manage it]? Jurnal Bionatura 5(2):97-111. [In Indonesian].
Reppie E., 2006 [Design, construction and performance (physical, biological and socio-economic) of artificial reefs as nursery grounds for coral fish]. Dissertation, Graduate School, Bogor Agricultural Institute, Bogor, Indonesia, 189 p. [In Indonesian].
Samidjan I., 2011 [The role of artificial reefs in conservation of *Chetodon* sp. and development effort in aquaculture]. Proceedings of the Fish Resources Promotion Forum III-KSI-03, BRPSI-PRPT, 10 p. [In Indonesian].
Shon B. K., Yi B. H., Yoon H. S., 2011 [Hydraulic characteristics of train carriage artificial reef in wave and current field conditions]. Journal of the Korean Society of Marine Engineering 35(1):108-117. [In Korean].
Sidek F. J., 2007 [The effect of porosity of submerged breakwater structures on non-breaking wave transformations]. Malaysian Journal of Civil Engineering 19(1):17-25. [In Malaysian].
Vivier B., Dauvin J. C., Navon M., Rusig A. M., Mussio I., Orvain F., Boutouil M., Claquin, P., 2021 Marine artificial reefs, a meta-analysis of their design, objectives and effectiveness. Global Ecology and Conservation 27:e01538.
Warzecha C., 1997 A new technology for artificial reef construction in coastal ecosystem. Restoration and Reclamation Review 2(3), 6 p.
White A. T., Ming C. L., De Silva M. W. R. N., Guarin F. Y., 1990 Artificial reefs for marine habitat enhancement in southeast Asia. Association of Southeast Asian Nations, United States Coastal Resources Management Project, Education Series 7, 57 p.
Yoon H. S., Kim D., Na W. B., 2016 Estimation of effective usable and burial volumes of artificial reefs and the prediction of cost-effective management. Ocean Coastal Management 120:135-147.

*** Ahmad A., 2012 [Pearl shell (*Pinctada maxima*) resource management in Indonesia]. Available at: https://www.academia.edu/22581874/PENGELOLAAN_SUMBERDAYA_KERANG_MUTIARA_Pinctada_maxima_DI_INDONESIA. [In Indonesian].
*** Southeast Maluku Meteorology, Climatologi, and Geophysics Agency, 2020 [Wind and wave direction and speed data for 2020]. [In Indonesian].

Received: 03 May 2022. Accepted: 18 July 2022. Published online: 06 January 2023.
Authors:
Jacomina Tahapary, Study Program of Marine Fishery Technology, Graduated Program, Bogor Agricultural University, Dramaga Campus, 16680 Bogor, Indonesia, e-mail: jacomina.tahapary@polikant.ac.id
Domu Simbolon, Department of Fishery Resources Utilization, Faculty of Fisheries and Marine Science, IPB University, Lingkar Kampus IPB St., 16680 Dramaga Bogor, Indonesia, e-mail: domu@apps.ipb.ac.id
Zulkarnain, Department of Fishery Resources Utilization, Faculty of Fisheries and Marine Science, IPB University, Lingkar Kampus IPB St., 16680 Dramaga Bogor, Indonesia, e-mail: zulkarnain@apps.ipb.ac.id
Budy Wiryawan, Department of Fishery Resources Utilization, Faculty of Fisheries and Marine Science, IPB University, Lingkar Kampus IPB St., 16680 Dramaga Bogor, Indonesia, e-mail: bud@psp-ipb.org

How to cite this article:
Tahapary J., Simbolon D., Zulkarnain, Wiryawan B., 2023 Design and physical performance of fish apartments by utilizing pearl oyster shell waste. AACL Bioflux 16(1):99-109.