Technological methods of breeding and rearing European catfish *Silurus glanis* in carp fish farms

[1]Galina I. Pronina, [1]Alfir G. Mannapov, [2]Alexander B. Petrushin, [2]Lyubov A. Rozumnaya, [2]Natalia Y. Koryagina

[1] Russian State Agrarian University, Moscow Timiryazev Agricultural Academy, Moscow, Russia; [2] Russian Research Institute of Integrated Fish Breeding, Branch of the L.K. Ernst Federal Science Center for Animal Husbandry, the village of Vorovsky, Russia. Corresponding author: G. I. Pronina, gidrobiont4@gmail.com

Abstract. European catfish (*Silurus glanis* Linnaeus, 1758) is relatively recent in pond aquaculture in Russia and a number of other countries. It can be effectively used in polyculture with carp (*Cyprinus carpio*) and herbivorous fish. Catfish can be raised in monoculture in cages and pools. An important stage is the formation of replacement broodstock herds. We used the photo-identification method to individually tag fish. Important in the technology of catfish breeding is the establishment of a system of its reproduction, which is carried out in three ways: natural spawning, artificial reproduction and the ecological and physiological method of obtaining offspring. This work shows the methods and techniques for determining the sex of European catfish breeders by the nature of the first hard rays of the pectoral fins. It is advisable to carry out intravital selection of reproductive products from males by surgical method of partial gonadectomy, or manual collection of sperm after anesthesia with clove oil and catheterization of the bladder. The incubation of catfish eggs is complicated by its uneven distribution and adhesion into a lump. For this, the modernization of the Amur apparatus was applied, allowing eggs to be incubated at several levels. The difficult moment is the organization of wintering of fry of common catfish when reared together with carp. We suggest using cages that are immersed in a wintering pond.
Key words: elements of technology, European catfish (*Silurus glanis* L.), feeding, polyculture with carp, reproduction, sperm production.

Introduction. The European catfish (*Silurus glanis* Linnaeus, 1758) is one of the most valuable predatory fish species for breeding. Its meat is white, low in fat (6-8%), devoid of intermuscular bones, has got a high rating in satisfactory food consumption and a pleasant consistency. European catfish has a high growth rate with sufficient food availability, is resistant to processing and has relatively low water quality requirements (Linhart et al 2002). In fish farms, it can be used as an ameliorator; it willingly eats weed fish and unwanted offspring resulting from carp (*Cyprinus carpio*) rearing (Zaikov et al 2008; Woynarovich et al 2010).

European catfish is raised as a monoculture in cages and pools, or as a polyculture with carp and other fish (Szabo et al 2015). Monoculture uses high protein pellets for feeding (Filipiak et al 1997; Haffray et al 1998; Linhart et al 2002). Under polyculture conditions, catfish are fed mainly with natural food (Linhart et al 2002; Zaikov 2006; Jankowska et al 2007).

The efficiency of growing European catfish in polyculture, in particular with sturgeon (reciprocal back cross hybrids of Siberian sturgeon *Acipenser baeri* and Russian sturgeon *Acipenser gueldenstaedtii*), is evidenced by the data obtained by Ulikowski et al (2003). It has been shown that the weight gain when these fish are reared together is higher than in a monoculture of each species (sturgeon grows faster in polyculture by 0.86% per day, catfish - by 0.28% per day). At the same time, intensive rearing of catfish and sturgeon in polyculture does not affect their survival rate (in catfish it was 99.5%, in sturgeon - 100% both in mono- and polyculture). Good results were obtained when growing European catfish as an additional crop with carp (Lembo & Mente 2019).

Fish farmers of Belarus have achieved significant success in the cultivation of European catfish in polyculture. It was proposed to grow catfish fingerlings in ponds in mono- and polyculture with carp fingerlings. It was revealed that the maximum fish productivity: 60 and 40 kg ha^{-1} for commercial two- and three-year-olds respectively can be obtained when grown together with a broodstock of carp (Konchits 2006; Dokuchaeva 2011).

In Russia, European catfish is also grown as an additional object in carp polyculture. Catfish fits well into the technology of carp fish farms without significant additional costs (Pronina & Petrushin 2015). For the reproduction and cultivation of catfish, production areas (including carp fish ponds) can be used. However, the imperfection of the technology of reproduction of this fish and the absence of broodstock catfish hinders its introduction into carp fish farms.

In this regard, the purpose of this research was the development of technological methods for breeding and rearing European catfish in polyculture with carp.

Material and Method. The work was carried out in fish farms in different regions of Russia: Chuvash Republic fish farms "Kirya", "Karamyshevskoe" (the second zone of fish farming), Volgograd region fish farms "Ergeninsky", "Flora" (the 5th zone of fish farming). The objects of research were producers of European catfish (*Silurus glanis* L.) in the amount of 310 heads.

The methods of fish reproduction adopted in fish farming were used. Males and females were caught from wintering ponds and their morphological and physiological assessment was carried out. In order to obtain offspring in one variant, natural spawning was carried out in spawning ponds. In another case, a more efficient, but time-consuming method of factory reproduction was used, including hormonal stimulation, obtaining sexual products, insemination and incubation of eggs in the apparatus «Amur». The rearing of juveniles and commercial fish was carried out in fish ponds together with carp (Steffens 1985; Dokuchaeva 2011; Usov 2011).

In the case of intravital production of genital products, surgical methods adopted in veterinary medicine with laparotomy were used: sterilization of instruments, general anesthesia, abdominal wall incision, vascular torsion, suturing, etc. (Magda et al 1990; Pronina & Petrushin 2019).

Anesthesia of fish was carried out using clove oil (Mikodina et al 2004; Park et al 2011).

Results. Since 1995, the staff of the All-Russian Research Institute of Irrigation Fish Farming has been working on the domestication of the European catfish. During this time, technological methods of its breeding and rearing in conditions of carp fish farms have been developed and breeding stocks of this fish have been created.

The introduction of European catfish into the technology of carp pond farms is based on a full-fledged system of its reproduction (Figure 1).

The catfish reproduction system consists of three blocks:

1. formation, planting for fattening and feeding of replacement broodstock of European catfish in carp farms;

2. methods of reproduction of catfish: spawning, reproduction in factory conditions and ecological and physiological method of obtaining offspring of catfish;

3. peculiarities in obtaining reproductive products and incubation of catfish eggs, methods of anesthesia and hormonal stimulation.

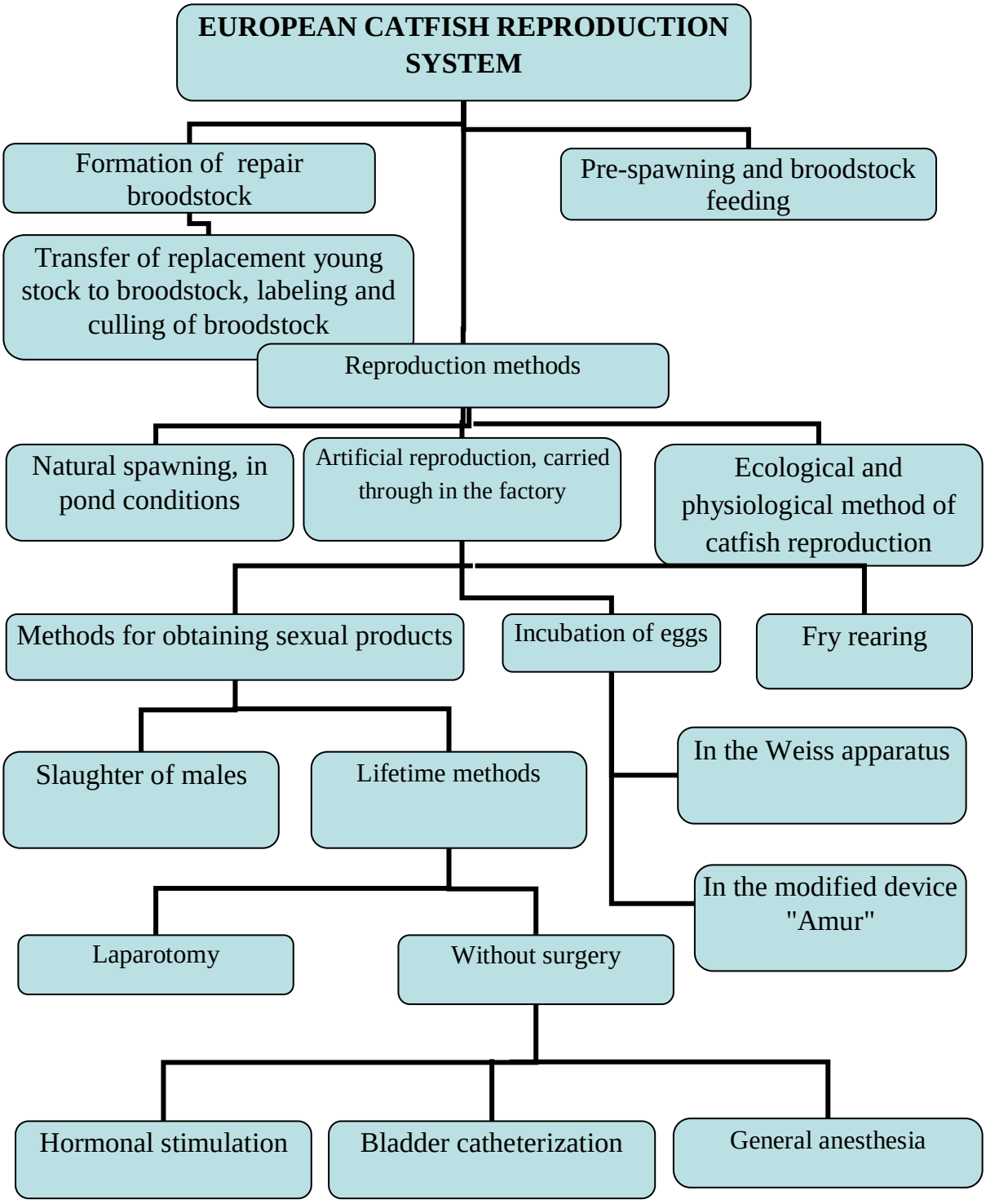

Figure 1. Diagram of the European catfish reproduction system.

Formation, planting for feeding and feeding of replacement broodstock of European catfish in carp farms. The first stage in the reproduction technology is the formation of a breeding stock of European catfish, which can be carried out in two ways: by removing individuals from their natural range or importing them from other farms. Selected catfish breeders weighing no more than 4-8 kg are placed in quarantine ponds after appropriate veterinary and sanitary measures.

Since catfish do not feed in winter, it is possible to plant catfish producers for the winter together with carp and other fish.

In spring, after sanitization and grading, catfish are planted in the corresponding carp ponds for feeding: carp and catfish of the same age are reared together, except for fish in the first year of life, which are reared separately. The optimal stocking density of broodstock and repair in carp ponds is 60-80 pcs ha^{-1} (Dokuchaeva 2011).

An important feature of the European catfish, in contrast to other predatory fish like pike (*Esox lucius*), pike perch (*Sander lucioperca*), perch (*Perca fluviatilis*), trout (*Oncorhynchus mykiss*), is its proximity to carp on demand for the main indicators of the chemical composition of the fish pond water and its transparency (Privezencev & Vlasov 2004; Carol et al 2007).

If in fish farming the main object of pond fish farming is carp, it feels good, then with a high degree of confidence we can say that these conditions are also suitable for European catfish. The catfish also tolerates the temporary high turbidity of the water (during the descent and fishing of ponds, where catfish were reared together with carp). The regulatory requirement for the level of overgrowth of carp ponds with higher aquatic vegetation - 25% is also suitable for growing catfish (Hilge 1985; Konchits 2006). The presence of natural shelters in ponds in the form of thickets of plants, snags or underwater burrows in pond dams significantly increase the survival rate of the European catfish and the rate of its growth (Petrushin et al 2012). Otherwise, to prevent stress from being in an open space in ponds that are shallow compared to the natural area (pools, etc.), it is necessary to organize shelters. The use of 1-3 meter sections of concrete, iron or rubber pipes of different diameters: 30-80 cm (Figure 2) has shown itself well.

Figure 2. Artificial shelters for European catfish producers.

Table 1 presents the basic requirements for carp ponds for breeding European catfish.

Table 1

Basic requirements for carp ponds for breeding European catfish

Age groups	*Pond categories*	*Additional terms and conditons*
Breeders	Spawning ponds	It is desirable to build artificial nests (roots of reeds, reeds and other plants).
	Summer uterine, winter uterine carp ponds	The overgrowth of ponds (those active during the months of summer) is obligatory at the level of 25% as well as the presence of juvenile carp from wild spawning, frogs or trash fish and built shelters.
Junior renovation	Summer repair, young carp ponds from 0.5 to 1 ha	Growing in polyculture with carp larvae, from 30.0 thousand pcs. up to 0.1 mln.pcs ha^{-1} and 5-10 tench nests.
Senior renovation	Summer-uterine, winter uterine carp ponds. Feeding carp ponds	Growing together with carp breeders.

Note: For senior repairs of European catfish, yearlings of carp or other fish, tadpoles and frogs can be used as food items.

The needs of a fish farm (having 200-300 hectares of feeding areas) in planting material for European catfish can be satisfied if only 8-15 pairs of broodstock, weighing 4-8 kg are kept, with full feeding of catfish breeders in the pre-spawning period, spawning in conditions of spawning and even summer brood carp ponds (with appropriate preparation), including the replanting of juvenile forage fish (silver carp *Carassius gibelio*, roach *Rutilus rutilus*) and the elimination of predatory fish or older carp in ponds with young catfish (eggs, larvae and fry) yearlings and older (Petrushin et al 2012).

As a result of many years of work, we have determined that, some features have the size of lattices and net fish traps when lowering and fishing ponds with European catfish underyearlings: the grates should be more frequent than for carp fingerlings, and the mesh size of net fish catchers should be no more than 5-6 mm.

The main issues in the development of biotechnology for the reproduction of European catfish is to combine it with the technology of breeding and raising carp, with a minimum of material resources and pond areas (for feeding catfish producers, their spawning and raising fry and underyearlings of catfish).

For the formation of a broodstock and for domestication and selection, individual marking of fish is required. In our work, we used the method of photo-identification of European catfish producers, which replaces methods of individual labeling, such as thermal or cryogenic branding, the use of organic dyes (Korovin 1976; Katasonov 1986), transponder implantation (Erbulekov & Nimatov 2006). Tagging methods are more or less traumatic, involve additional costs and require a certain amount of skilled labor. In addition, a number of common tagging techniques are difficult to apply to fish lacking scales (Petrushin et al 2012). Taking into account the biological characteristics of the European catfish (a significant need for natural shelters, feeding in thickets of higher aquatic plants), it was necessary from the very beginning to abandon the use of hinged marks, more suitable for pelagic fish.

In the process of carrying out mass appraisals of replacement livestock and European catfish producers, attention was drawn to the fact that the nature of the pigmentation of the ventral part of the body in different individuals is very diverse in the location, shape and contrast of spots.

The results of studies of European catfish in different fish breeding zones show that genetically determined variations, such as albinism, are more convenient as a group (linear) marker, and characteristic areas of the body surface with discrete pigmentation and scars can serve as individual marks (Figure 3).

Figure 3. Staining of the abdomen of the catfish *Silurus glanis* L.

When introducing European catfish into a pond polyculture with carp, it is important to assess the possible forage resources suitable for their use by catfish, the timing of their presence in the reservoir, the possibility of feeding during periods of maximum nutritional activity (pre-spawning feeding). Forage niches for European catfish depend on the climatic zone, the overgrowth of the pond, the species composition of higher aquatic vegetation, the average depth of the reservoir, the presence and thickness of the silt layer, the temperature and hydrochemical composition of the water of fish ponds, filters and fish barriers at the water supply, and a number of other reasons (Konchits 2006; Havasi et al 2013).

The wide range of nutrition of European catfish allows it to use a significant number of food species - inhabitants of fish ponds: weed fish, tadpoles and frogs, crayfish, insects and their larvae, at different stages of development, etc. (Ulikowski et al 2003; Vejřík et al 2017).

The experience by authors of this study of growing European catfish in carp fish farms shows that the main components of the diet for them can be: fish left over from the sale, crayfish, food waste, specialized feed (Table 2).

Table 2

Forage rations for catfish fish farm "Flora" (Petrushin et al 2019)

Components	*Diet 1*	*Diet 2*
Pre-cut fish, kg	620	380
Crayfish, kg	152	50
Poultry meat, kg	180	264
Live fish (carp), kg	1000	450
Natural food base (frogs and tadpoles)	as available	as available

If catfish producers are planted in ponds for spawning in order to obtain offspring, then it is impossible to feed live fish, because it can eat young catfish. In this case, it is recommended to cut the fish into pieces.

Depending on the technological capabilities of fish farms, the following methods of feeding catfish (or their combination) can be used: feeding from the natural food base of

the pond (pasture); feeding from the natural food base of the pond and additional feeding (combined); feeding due to the directed formation of the natural food base of the pond; feeding with artificial high-protein compound feed (Petrushin et al 2019).

For normal growth and maturation of producers, it is necessary to provide them with food places and feed them in the pre-spawning period at the rate of 6 kg of trash fish per 1 kg of fish body weight per season (Dokuchaeva 2011).

The feeding area for feeding senior repairs and European catfish producers is equipped with a feeding table or, at least, a section of a pond with dense soil, water depth and transparency sufficient for visual control over the consumption of the given feed is selected. However, in order to ensure the normal feeding process of catfish producers, it is necessary to create a shelter zone near the feeding area. This is especially important for ponds in which the area occupied by higher aquatic vegetation (reed *Phragmítes australis*, cattail *Typha* sp., bulrush *Scirpus* sp.) is less than the recommended 25%. Catfish producers who are deprived of shelter areas, even provided with a sufficient amount of food, are under stress, which negatively affects the payment for the assigned feed and the results of fish feeding.

It has been experimentally proven that when using shelters for catfish in carp ponds, body weight increases 2.5 times compared to those grown without shelters, with the same food supply (Petrushin et al 2019).

Methods of catfish reproduction: spawning, reproduction in factory conditions and an ecological and physiological method of obtaining catfish offspring. For successful reproduction of fish, it is necessary to first determine the sex of the producers.

To identify the sex of European catfish breeders, a method of palpation of the first hard rays of the pectoral fins was proposed (Petrushin et al 2012). When you run your fingers along the lower part of the first rays of the pectoral fins, males have sharp spines 0.6-0.9 cm long. In female catfish, the total number of these spines is much less, and their length is 0.2-0.4 cm (Figure 4).

Figure 4. The first hard rays of the pectoral fins of a catfish: 1 - female, 2 - male.

When comparing the same-aged males and females of the European catfish, which have similar body mass indices, the first hard rays of the pectoral fins of males are more massive and longer than those of females.

In the conditions of carp fish farms, catfish reproduction is possible in three ways: natural spawning, ecological and physiological reproduction and factory reproduction.

Catfish spawning. We found that the reproduction of catfish planted in ponds is more successful than in natural reservoirs. Fish ponds are usually shallow, well heated, which promotes the rapid maturation of broodstock and accelerates the development of eggs. Natural spawning of European catfish is carried out in summer brood carp ponds with an area of 0.4-1.2 hectares, the stocking density of catfish producers is 3-6 pairs per 1 hectare. The catch of juveniles is carried out no later than 20-30 days after spawning. The yield of juvenile catfish with this approach is usually low. If there are few thickets of higher aquatic vegetation in the ponds intended for spawning of catfish, it is necessary to build special nests (Ulikowski et al 2003).

Ecological and physiological method of reproduction of European catfish. The most optimal is the ecological and physiological method of catfish reproduction, which consists in planting catfish for spawning in flowing plastic tubs or cages with pituitary gland extract injections (Dokuchaeva 2011; Usov 2011).

Catfish breeding. The method of artificial reproduction of European catfish is classic for fish farming. With this method, the producers are euthanized with an anesthetic, and the genital products are obtained artificially, having previously been injected with a suspension of the carp pituitary gland at the rate of 3.5-4.0 mg kg^{-1} of body weight (Steffens 1985). Clove oil has proven itself as an anesthetic for short-term fish-breeding manipulations with different fish species (Mikulin et al 2005).

To preserve the livestock of European catfish males during artificial reproduction, a technique has been developed for intravital partial resection of the gonads.

One of the narrow issues of obtaining the reproductive products of European catfish males for incubation of eggs in the conditions of factory reproduction is the excessive separation of urine and its ingress into the selected sperm, which sharply deteriorates the quality of sperm and negates the possibility of normal insemination of catfish eggs, with the receipt of which there are much fewer problems. Therefore, in fish farming practice, to obtain sperm, the method of slaughtering male European catfish with subsequent opening and separation of the gonads is often used. This technique solves the issue of obtaining sexual products for incubating eggs, but annually leads to a decrease in the number of high-quality males (Brzuska 2003; Viveiros 2003; Szabó et al 2015).

The proposed method of intravital extraction of a part of the gonad of a European catfish male allows preserving the number of male catfish (Pronina & Petrushin 2019). Features of surgical techniques during the operation:

1. general anesthesia of males in baths with anesthetic emulsion - clove oil at a dose of 0.04 mL L^{-1};
2. a small incision (on the skin 7 cm, on the peritoneum 5 cm), providing quick access and minimal trauma;
3. incision along the white line and ligation of the gonadal stump with silk, which reduces blood loss;
4. separate intermittent eight-shaped sutures on the peritoneum and skin, creating additional anastomoses for holding and fixing internal organs;
5. to recover from anesthesia, abundant irrigation of the gills with water is performed.

After the end of the growing season, complete healing of the suture was observed (Figure 5E), the body weight gain of the operated males averaged more than 1 kg, which was ensured by placing the males in a pond with a good food supply.

To improve reproduction and to obtain high-quality reproductive products of European catfish, a method of intravital bladder catheterization before sperm collection has been developed (Pronina et al 2017). The method includes catheterization of the bladder through the genital papilla with a disposable medical subclavian catheter (Figure 5).

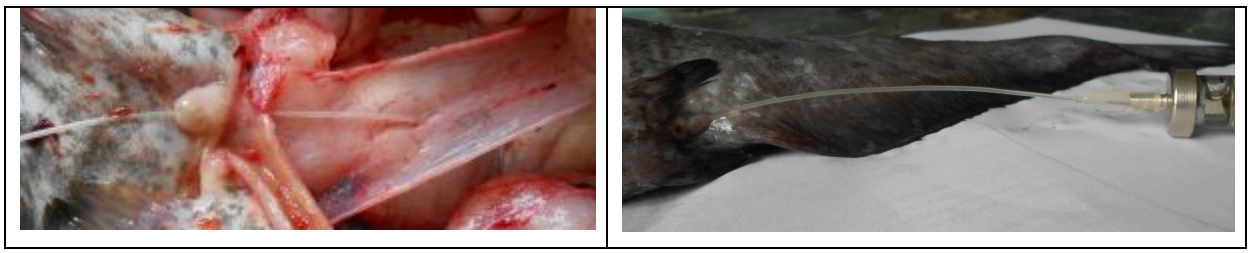

Figure 5. Catheterization of the bladder.

The incubation apparatus of Weiss and VNIIPRKh is traditionally used for the incubation of eggs. The research results showed that the use of the modified Amur apparatus is effective. To ensure that the European catfish caviar (without the de-gluing procedure) is

evenly distributed in the apparatus, a cassette of covered frames (44 pieces), mesh size 15 x 15 mm, is installed (Figure 6). And an additional pump (30 L min^{-1}) with a tee and a tap to create, if necessary, a closed circulation of water in the apparatus, which allows, in particular, to carry out preventive treatment of caviar. You can put 4-8 kg of catfish caviar in the apparatus (Petrushin et al 2012).

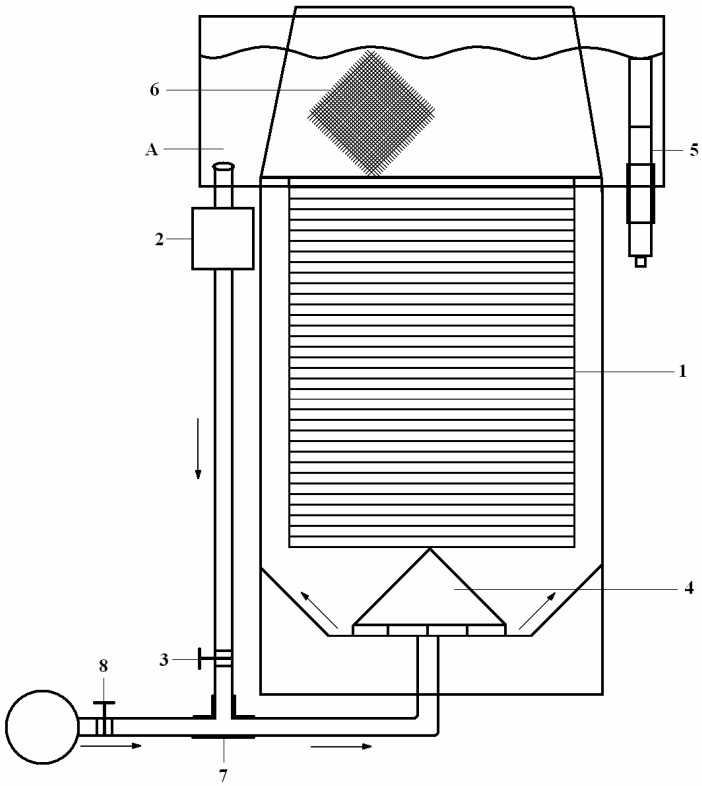

Figure 6. Diagram of the modernized Amur apparatus for incubating eggs and keeping European catfish larvae: 1 - frame cassette; 2 - pump; 3 - crane; 4 - cone of the water supply unit; 5 - branch pipe; 6 - barrage mesh; 7 - tee; 8 - crane; A - point of application of drugs.

The positive effect of using the modernized Amur apparatus for incubating eggs and keeping European catfish prelarvae is as follows:

1. a significant amount of catfish caviar (4-8 kg) can be put into the apparatus at a time;
2. there is no need to glue the caviar;
3. in addition to the incubation of eggs in the Amur apparatus, the prelarvae and larvae of catfish are kept (up to 2 days);
4. additional equipment allows for high-quality preventive processing of caviar.

Catfish underyearlings can be grown in nursery ponds together with carp at a catfish stocking density of 600-1500 pcs ha^{-1}, while the weight of catfish underyearlings reaches 20-120 g (depending on the availability of food and fish breeding zones), and they winter well in wintering ponds together with carp.

One of the issues of introducing the reproduction and cultivation of European catfish in a carp pond farm is the difficulty of wintering a limited number of young catfish (breeding underyearlings) in wintering ponds with carp producers. There is no problem of wintering marketable underyearlings of catfish; they winter well together with marketable underyearlings of carp.

It is shown that it is desirable to winter a catfish of different ages in a monoculture, but it is possible to carry out in ordinary wintering ponds together with the same age or older age groups of other fish species raised on farms.

For wintering a limited number of catfish fingerlings in wintering ponds with carp producers, a cage is proposed, which is a cylinder, made of a metal or wooden frame, covered with a cell size of 0.5 cm about 200 liters (Figure 7).

Figure 7. Cage for wintering catfish fingerlings.

The stocking density of underyearlings (average body weight 8-10 g) is 500 individuals per cage. The catfish cage is immersed in a wintering pond with carp producers. The yield of breeding yearlings of catfish during wintering in cages is 95% and higher. The average body weight loss of yearlings of catfish is approximately 30-32%.

The use of wintering of junior catfish repair in an underwater cage in a pond with carp producers allows adapting the European catfish growing technology to the production cycle of carp fish farming.

Conclusions. Thus, on the basis of the studies carried out, a reproduction system for European catfish was developed, including: formation, feeding and feeding of replacement brood catfish herds in carp farms; methods of catfish reproduction: spawning, reproduction in factory conditions and ecological and physiological method of obtaining catfish offspring; especially in obtaining reproductive products and incubation of catfish eggs, methods of anesthesia and hormonal stimulation. New methods of catfish reproduction have been proposed: sex determination, individual marking of fish, organization of feeding and fattening, spawning of producers, obtaining sexual products for artificial reproduction, including new surgical techniques for intravital extraction of male reproductive products and incubation of fertilized eggs. The proposed technological methods for the reproduction and cultivation of European catfish will allow, without special additional costs and efforts, to introduce it into the technology of carp fish farms and to receive 50-80 kg ha^{-1} of additional high-quality fish products.

Conflict of interest. The authors declare that there is no conflict of interest.

References

Brzuska E., 2003 Artificial propagation of European catfish (*Silurus glanis*): application of a single dose of pellets containing D-Ala6, Pro9 NEt-mGnRH and dopamine inhibitor metoclopramide to stimulate ovulation in females of different body weight. Czech Journal of Animal Science 48(4):152-163.

Carol J., Zamora L., Garcia-Berthou E., 2007 Preliminary telemetry data on the patterns and habitat use of European catfish (*Silurus glanis*) in a reservoir of the River Ebro, Spain. Ecology of Freshwater Fish 16:450-456.

Dokuchaeva S. I., 2011 [Development of technological solutions for growing European catfish (*Silurus glanis*) in pond farms in Belarus]. Vestsi Natsyanalnay Akademii Navuk Belarus 2:75-86. [in Russian]

Erbulekov S. T., Nimatov A. I., 2006 [About tagging of juvenile beluga in the Ural-Caspian basin]. Available at: http://hdl.handle.net /123456789 /2368. [in Russian]

Filipiak J., Sadowski J., Trzebiatowski R., 1997 Comparative analysis of results of using different food rations in juvenile wels (*Silurus glanis*) culture. Acta Ichthiologica et Piscatoria 27(1):41-50.
Haffray P., Vauchez C., Vandeputte M., Linhart O., 1998 Different growth and processing traits in males and females of European catfish, *Silurus glanis*. Aquatic Living Resources 11(5):341-345.
Havasi M., Olah T., Felfoldi Z., Nagy S., Bercsenyi M., 2013 Passing times of two types of feeds in wels (*Silurus glanis*) at three different temperatures. Aquaculture International 21(4):861-867.
Hilge V., 1985 The influence of temperature on the growth of the European catfish (*Silurus glanis* L.). Journal of Applied Ichthyology 1(1):27-31.
Jankowska B., Zakes Z., Zmijewski T., Ulikowski D., Kowalska A., 2007 Slaughter value and flesh characteristics of European catfish (*Silurus glanis*) fed natural and formulated feed under different rearing condition. European Food Research and Technology 224(4):453-459.
Katasonov V. Y., Cherfas N. B., 1986 [Selection and breeding in fish farming]. izd Agropromizdat, Moscow, 183 pp. [in Russian]
Konchits V. V., 2006 [Technology of reproduction and cultivation of European catfish in the conditions of pond farms of the Republic of Belarus: collection of scientific, technological and methodological documentation on aquaculture in Belarus]. izd Tonpik, Minsk, 24 pp. [in Russian]
Korovin V. A., 1976 [Pedigree work in industrial carp farms in Siberia]. Method. rivers. Novosibirsk State Pedagogical University, Novosibirsk, 62 pp. [in Russian]
Lembo G., Mente E., 2019 Organic aquaculture: impacts and future developments. Springer, 192 pp.
Linhart O., Šětch L., Švarc J., Rodina M., Audebert J. P., Grecu P., Billard R., 2002 The culture of the European catfish, *Silurus glanis*, in the Czech Republic and in France. Aquatic Living Resources 15(2):139-144.
Magda I. I. (ed), Itkin B. Z., Voronin I. N., 1990 [Operative surgery]. izd. Agropromizdat, Moscow, 333 pp. [in Russian]
Mikodina E. V., Mikulin A. E., Kourzhil Y., Lyubaev V. Y., 2004 [On a new anesthetic "clove oil" and its use in manipulating beluga, Amur and Sakhalin sturgeon]. In: [Proceeding IIIrd International scientific and practical conference "Aquaculture of sturgeon fishes: achievements and development prospects"]. Astrakhan, pp. 51-55. [in Russian]
Mikulin A. E., Kourzhil Y., Mikulina Y. A., Mikodina E. V., 2005 [The role of anesthetics as a diabetogenic factor in fish]. In: [Actual problems of ecological physiology, biochemistry and genetics of animals]. Saransk, pp. 152-154. [in Russian]
Park I. S., Park S. J., Gil H. W., Nam Y. K., Kim D. S., 2011 Anesthetic effects of clove oil and lidocaine-HCl on marine medaka (*Oryzias dancena*). Lab Animal 40(2):45-51.
Petrushin A. B., Maslova N. I., Vlasov V. A., Labenets A. V., Petrushin V. A., Smolin V. V., Pronina G. I., Dyakonov A. N., 2012 [Collection of methods for breeding and cultivation of common (*Silurus glanis* L.) and clarius (*Clarias gariepinus*) catfish]. Russian State Agricultural University named after K.A. Timiryazeva, Moscow, 80 pp. [in Russian]
Petrushin A. B., Rozumnaya L. A., Pronina G. I., Koryagina N. Y., Shishanova E. I., 2019 [The results of growing catfish (*Silurus glanis* L.) under different feeding conditions]. Fish Farming and Fish Industry 2(157):34-39. [in Russian]
Privezencev Y. A., Vlasov V. A., 2004 [Fish farming]. Moscow: “Mir”, 456 pp. [in Russian]
Pronina G. I., Petrushin A. B., 2019 Techniques for *in vivo* extraction of gonads of male European catfish (*Silurus glanis*) for the artificial reproduction. AACL Bioflux 12(4):1316-1322.
Pronina G. I., Koryagina N. Y., Petrushin A. B., 2017 [Method of catheterization of the urinary bladder in fish: patent for invention: No. 2608718]. [in Russian]
Pronina G. I., Petrushin A. B., 2015 [Fish polyculture and integrated technologies]. Fish Farming and Fish Industry 11-12:44-51. [in Russian]

Steffens V., 1985 [Industrial methods of fish farming]. izd Agropromizdat, Moscow, pp. 213-216. [in Russian]
Szabo T., Radics F., Borsos A., Urbányi B., 2015 Comparison of the results from induced breeding of European catfish (*Silurus glanis* L.) broodstock reared in an intensive system or in pond conditions. Turkish Journal of Fisheries and Aquatic Sciences 15 (2):385-390.
Ulikowski D., Szczepkowski M., Szczepkowska B., 2003 Preliminary studies of intensive wels catfish (*Silurus glanis* L.) and sturgeon (*Acipenser* sp.) pond cultivation. Archives of Polish Fisheries 11(2):295-300.
Usov M. M., 2011 [Improvement of the semi-factory method of reproduction of the European catfish]. Actual Problems of Intensive Development of Animal Husbandry 14(1):329-335. [in Russian]
Vejřík L., Vejříková I., Blabolil P., Eloranta A. P., Kočvara L., Peterka J., Sajdlová Z., Hoang S., Chung T., Šmejkal M., Kiljunen M., Čech M., 2017 European catfsh (*Silurus glanis*) as a freshwater apex predator drives ecosystem via its diet adaptability. Scientific Reports 7:15970.
Viveiros A. T. M., 2003 Semen collection in catfish species, with particular emphasis on the African catfish. Animal Breeding Abstracts 71(12):7-13.
Woynarovich A., Moth-Poulsen T., Péteri A., 2010 Carp polyculture in Central and Eastern Europe, the Caucasus and Central Asia. FAO Fisheries and Aquaculture Technical Paper No. 554, Rome, 73 pp.
Zaikov A., 2006 Aquaculture - principals and technologies. Kabri, Sofia, 376 pp.
Zaikov A., Iliev I., Hubenova T., 2008 Investigation on growth rate and food conversion ratio of wels (*Silurus glanis* L.) in controlled conditions. Bulgarian Journal of Agricultural Science 14(2):171-175.

Received: 03 January 2022. Accepted: 07 February 2022. Published online: 28 February 2022.
Authors:
Galina Iozepovna Pronina, Russian State Agrarian University, Moscow Timiryazev Agricultural Academy, 49 Timiryazevskaya str., Moscow, 127550, Russian Federation, e-mail: gidrobiont4@yandex.ru
Alfir Gabdullovich Mannapov, Russian State Agrarian University, Moscow Timiryazev Agricultural Academy, 49 Timiryazevskaya str., Moscow, 127550, Russian Federation, e-mail: 54alfir@mail.ru
Alexander Borisovich Petrushin, Russian Research Institute of Integrated Fish Breeding, Branch of the Federal Science Center for Animal Husbandry named after academy Member L.K. Ernst, Moscow region, the village of Vorovsky, Sergeeva str., No. 24, postal code 142460, Russian Federation, e-mail: shurapetrushin@yandex.ru
Lyubov Anatolyevna Rozumnaya, Russian Research Institute of Integrated Fish Breeding, Branch of the Federal Science Center for Animal Husbandry named after academy Member L.K. Ernst, Moscow region, the village of Vorovsky, Sergeeva str., No. 24, postal code 142460, Russian Federation, e-mail: rozumnaya65@mail.ru
Natalia Yuryevna Koryagina, Russian Research Institute of Integrated Fish Breeding, Branch of the Federal Science Center for Animal Husbandry named after academy Member L.K. Ernst, Moscow region, the village of Vorovsky, Sergeeva str., No. 24, postal code 142460, Russian Federation, e-mail: natalykoryagin@yandex.ru

How to cite this article:
Pronina G. I., Mannapov A. G., Petrushin A. B., Rozumnaya L. A., Koryagina N. Y., 2022 Technological methods of breeding and rearing European catfish *Silurus glanis* in carp fish farms. AACL Bioflux 15(1):520-531.